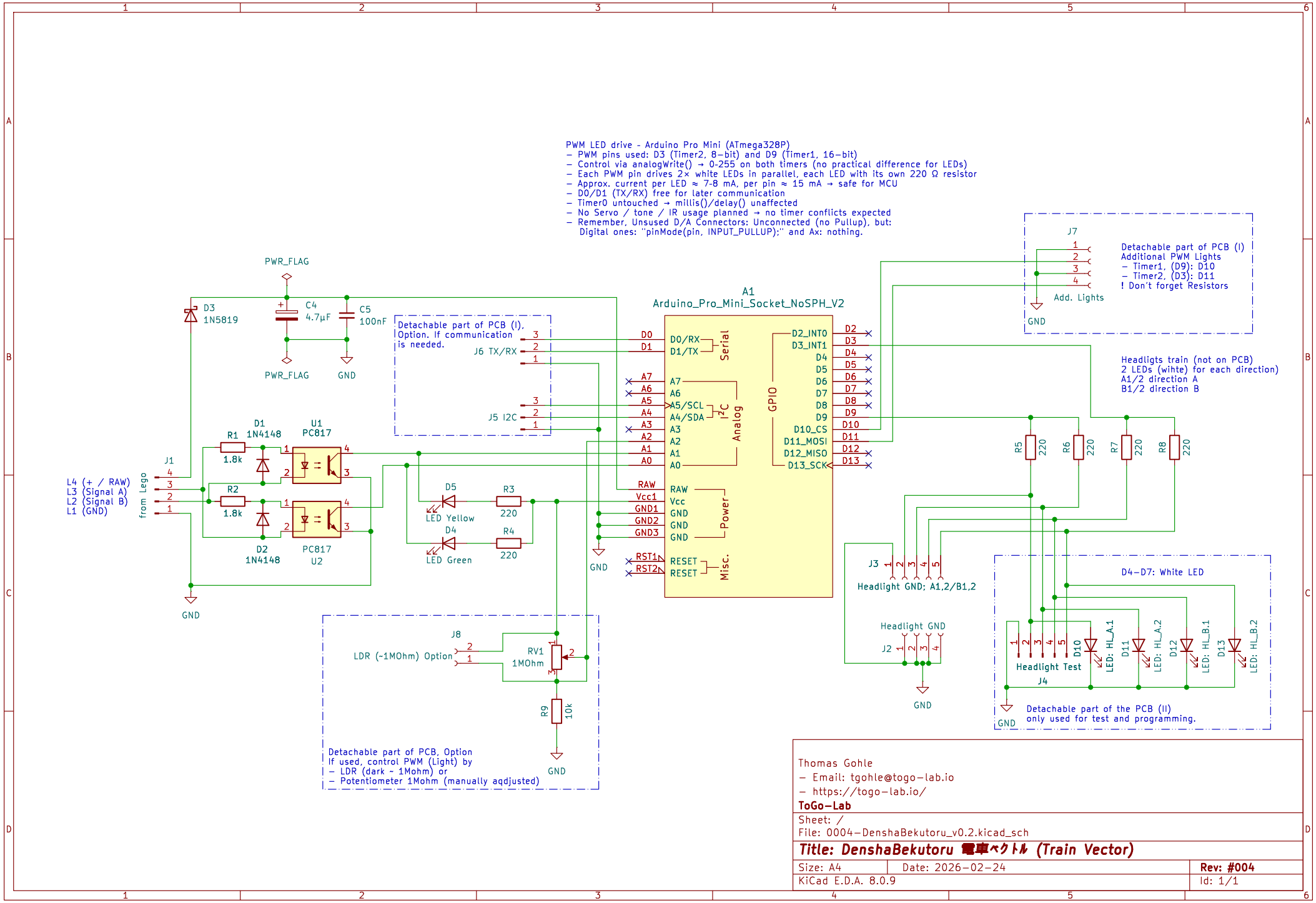

Thomas Gohle
– Email: tgohle@togo–lab.io
– https://togo–lab.io/
ToGo–Lab

Sheet: /
File: 0004–DenshaBekutoru_v0.2.kicad_sch

Title: DenshaBekutoru 電車ベクトル (Train Vector)

Size: A4	Date: 2026–02–24	**Rev: #004**
KiCad E.D.A. 8.0.9		Id: 1/1