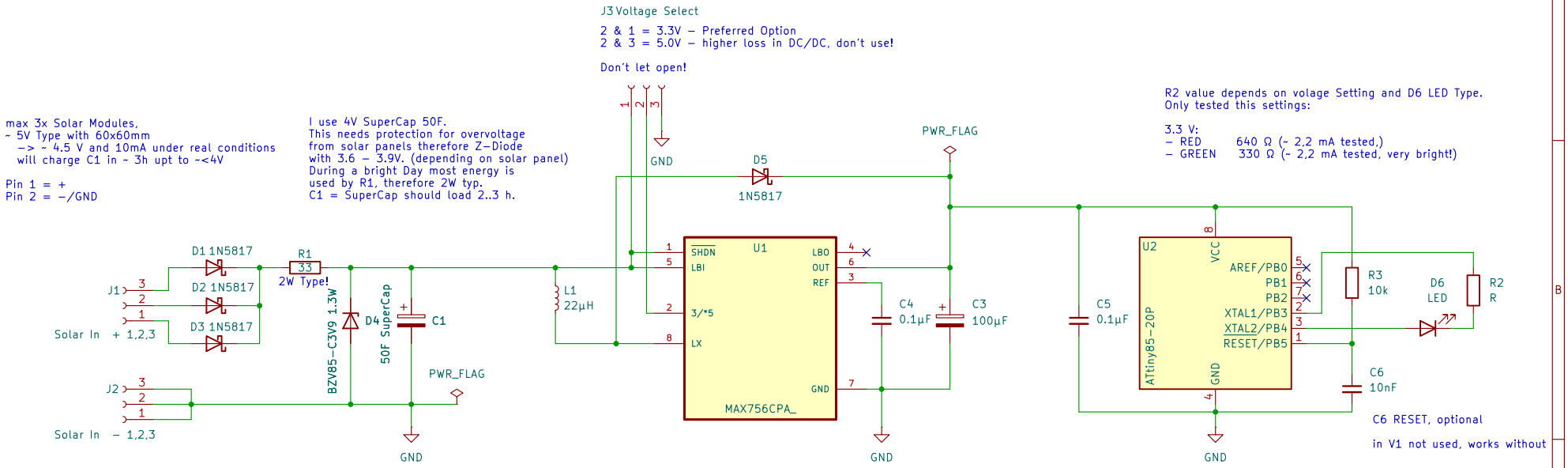

Email: tgohle@togo–lab.io
WWW: https://togo–lab.io
Tōgō Lab / 塔郷研究所

Sheet: /
File: 0001_FireFly–Solar.kicad_sch

Title: 日輪蛍 / Nichirin Hotaru / FireFly Solar

Size: A4	Date: 2026–11–15	**Rev: 4**
KiCad E.D.A. 10.0.8		Id: 1/1